GREEN-TEC™
A TEREX BRAND

Vegetation and Tree Care Solutions



Terex.com/Green-Tec

LS4 Product Training



Green-Tec LS4



Machine Overview

The LS4 is a single-shaft slow speed shredder with the ability to work as a primary shredder in a wide variety of applications.



Features

- Hydrostatic drive
- Hydraulic operated comb with two overload relief modes to cope with materials that cannot be processed
- Unrivalled service access
- 300mm chassis riser

Machine Overview/ Tracked

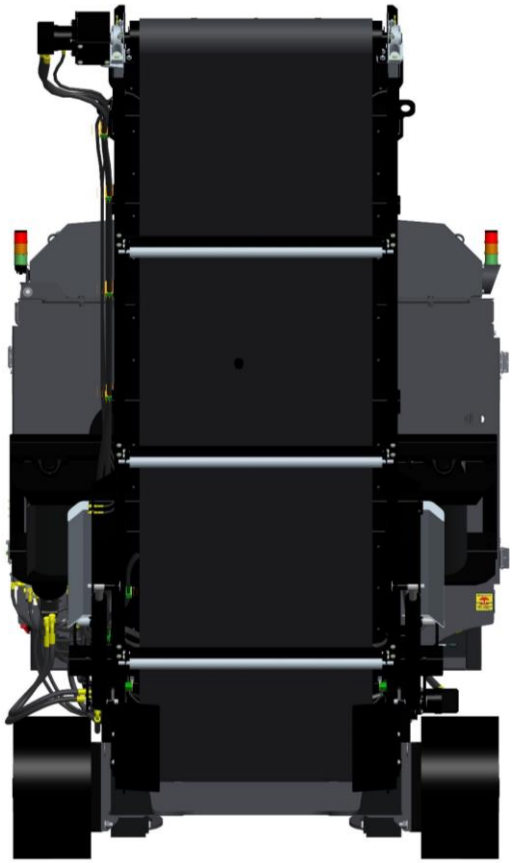

Front Elevation

Right



Left

Front



Rear Elevation

Key Components

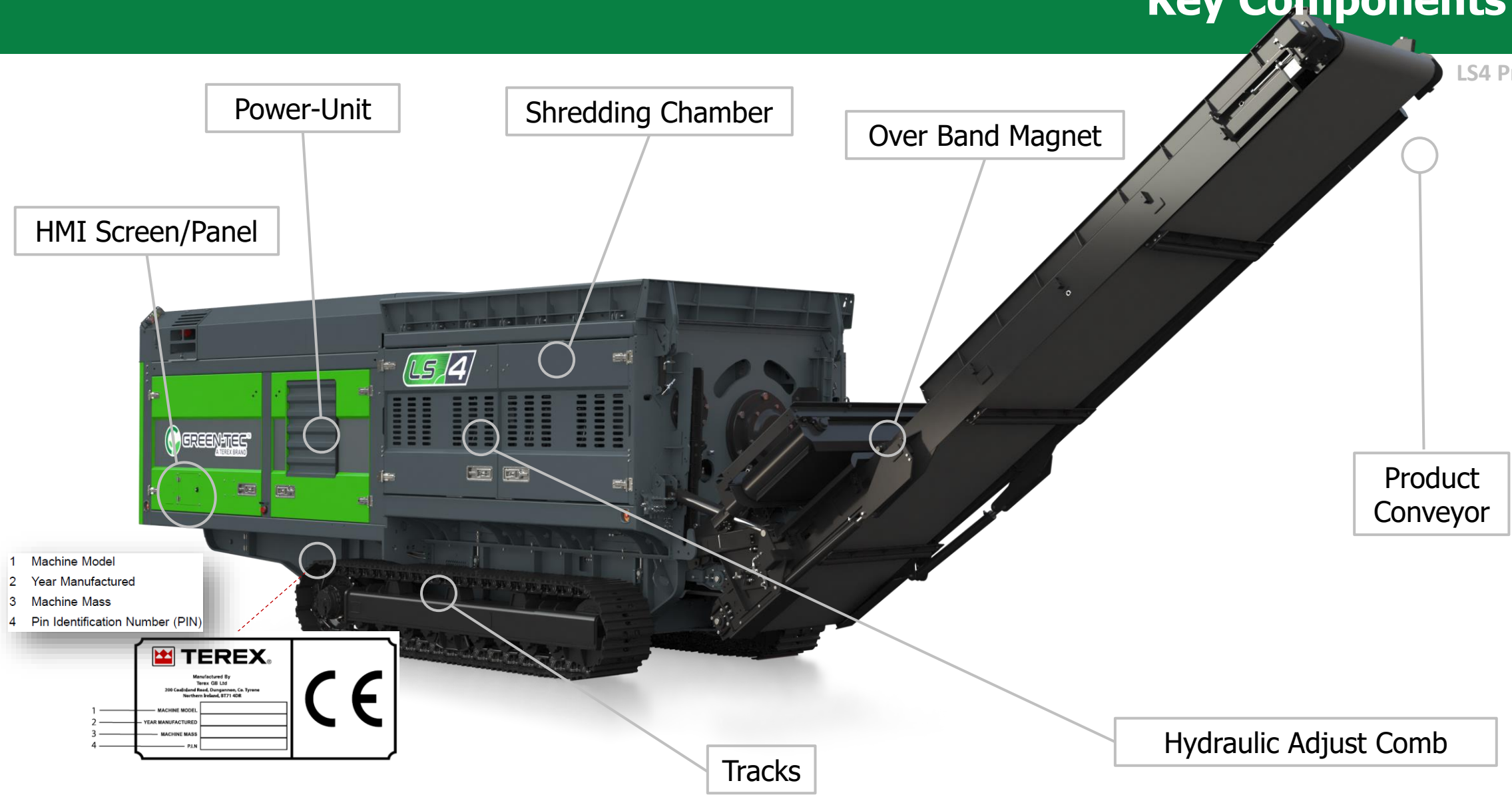

Transport Dimensions

- Length: 10.18m (33’ - 4 ¾ ”)
- Width: 2.53m (8’ – 3 ½ ”)
- Height: 3.395m (11’ – 1 ¾ ”)
- Weight: 32,000Kg (35,200lbs) (base weight)
- Weight (with magnet): 33,350Kg (35,200lbs)



Machine Overview/ Working Dimensions



Working Dimensions

- Length: 14.6m (47’ - 10 ¾ ”)
- Width: 2.53m (8’ – 4 ”)
- Height: 4.65m (15’ – 3 ”)
- Chamber feed in height: 2.8m (9’ – 2”)

Key Overview/ Shredding Chamber

Key Components in Chamber

1. Liebherr two-stage motor for shredder drive system
2. Shredding shaft with 36 teeth
3. Comb
4. Chamber capacity 5.4m3 or 7.8 cubic yards

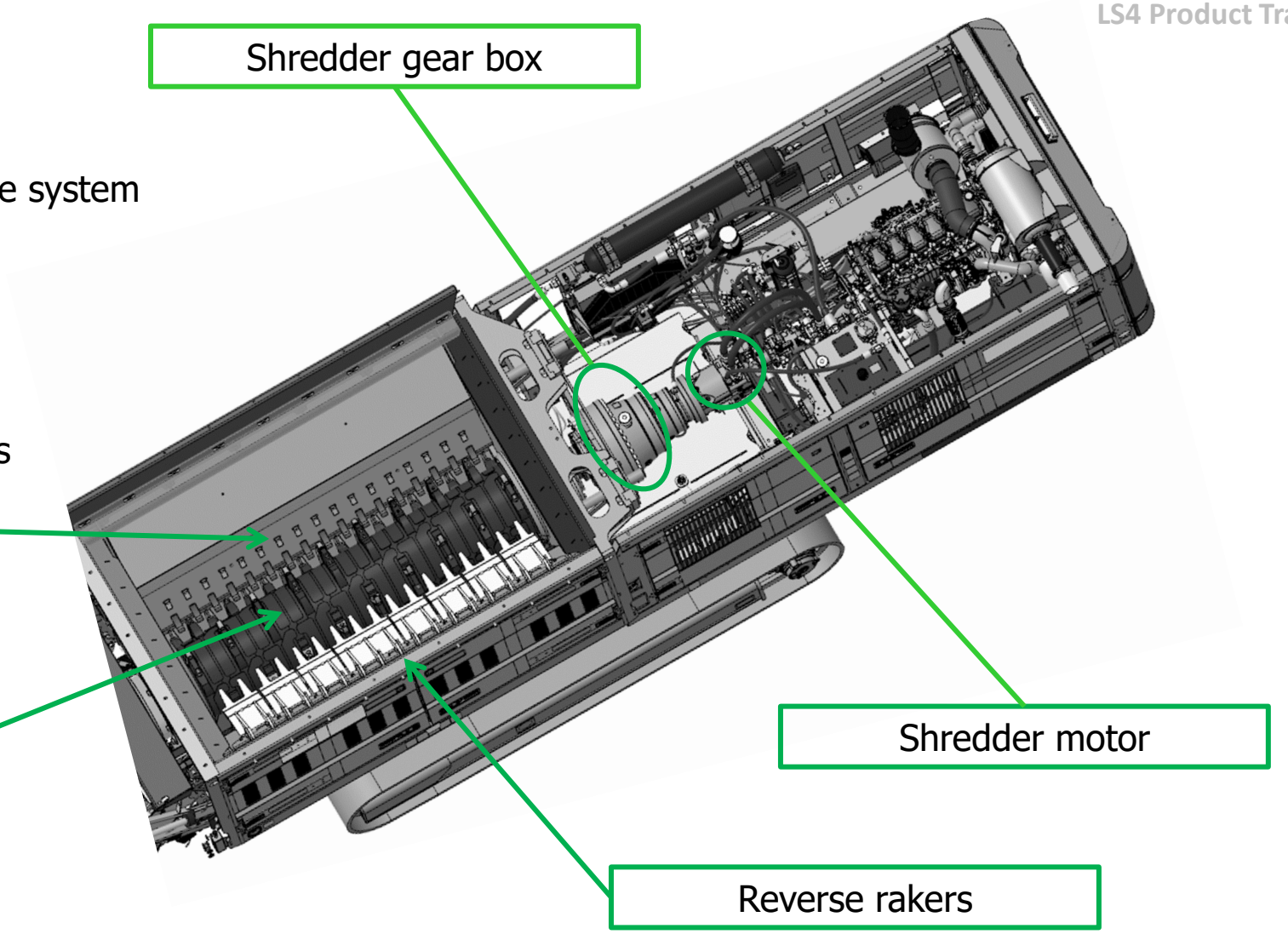

Machine Overview/ Shredding Shaft

- Very aggressive intake resulting in good production.
- 3.0m (9'- 10") shredding shaft driven by a hydrostatic pump and motor system.
- Various teeth configurations.





18 tooth shaft





36 tooth shaft

SHREDDING UNIT
Type of Shredder: Single shaft slow speed (0 – 32 RPM)
Shaft Length: 3000mm
Shaft Diameter (Tooth Tip): 990mm
Max. Shaft Torque: 220+ KNm
Hydraulic Tramp Relief System
Sizing Screen (Option)
Side Comb Access
Bolt on Teeth (18 or 36 teeth options)

Machine Overview/ Shredding Motor

- Hydrostatic motor allows operation in both directions.
- Intelligent load sensing controller allows machine to move from minimum torque to maximum torque to help shred more demanding material effectively.
- 0 – 32 RPM running speeds.
- Max shaft torque of 220+ KNm.

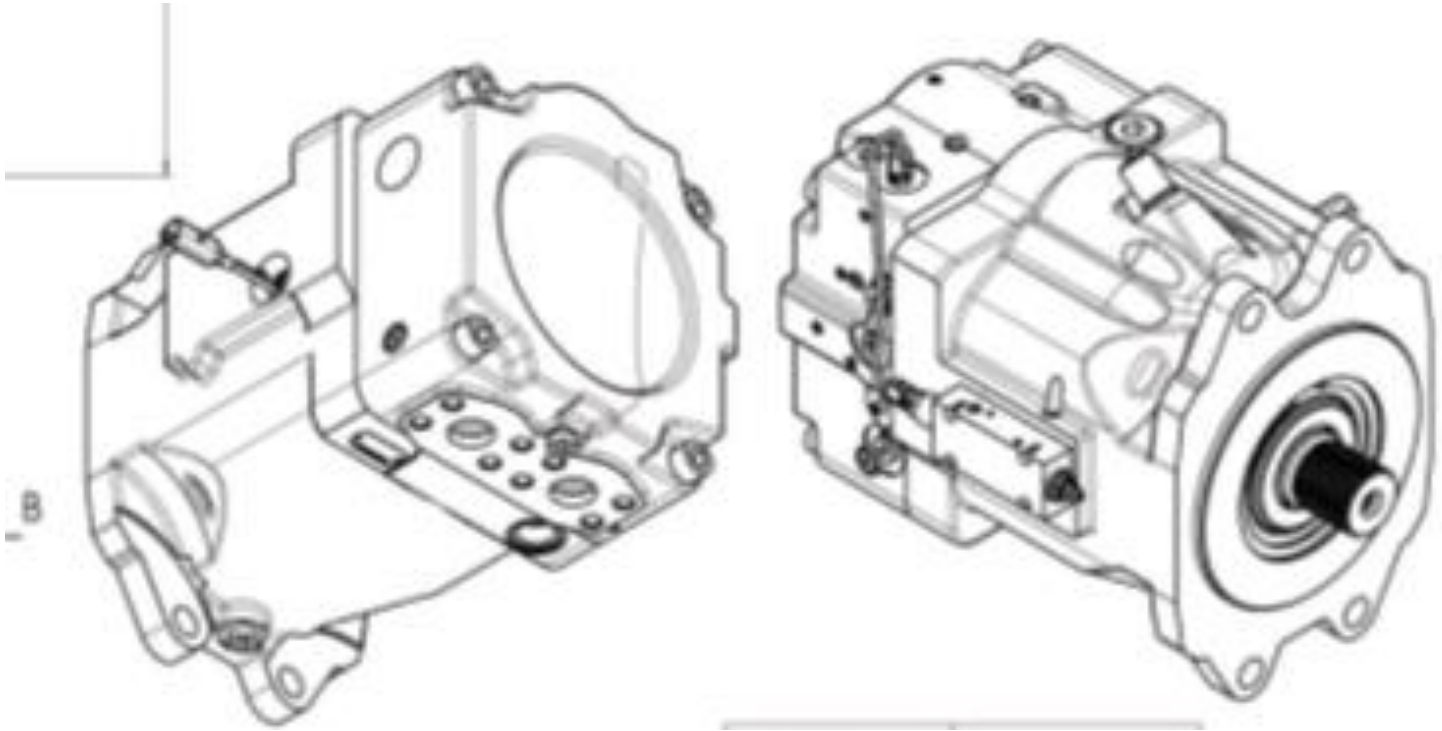

Machine Overview/ Comb

- Counter comb position is adjusted hydraulically to vary product sizing.
- Counter comb can be set in two different modes: comb release and comb lockout.
- Comb extensions can be fitted to hold material close to the shaft to get a finer product.

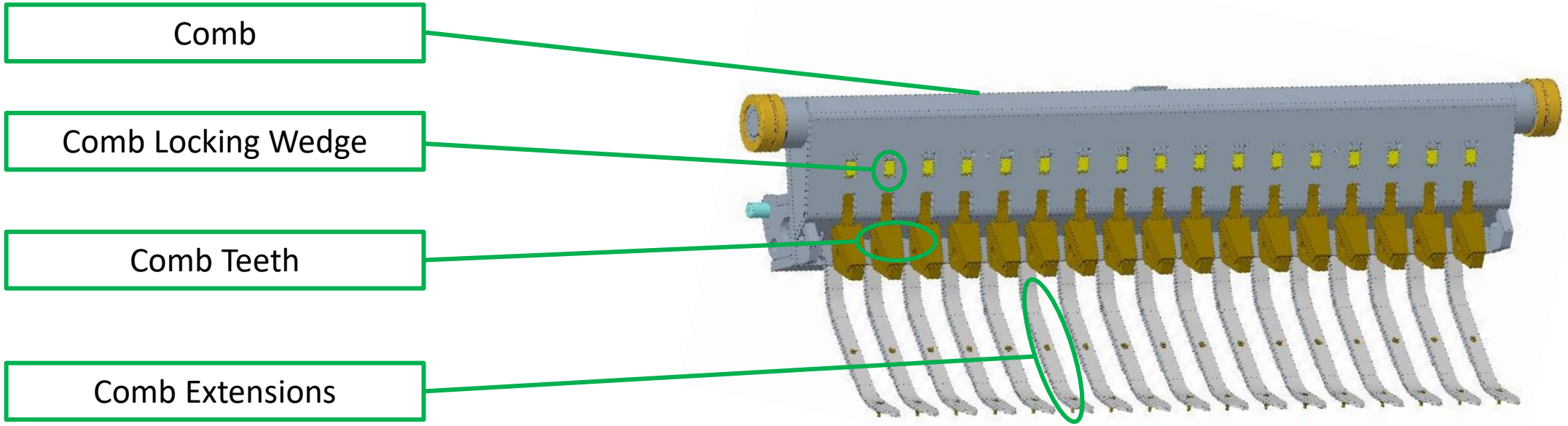

Machine Overview/ Comb

Comb Relief Mode

- Comb is held in position by 4 hydraulic cylinders.
- Non-shreddable object causes comb pressure to rise.
- Comb opens to allow non-shreddable object to pass.

Press Play

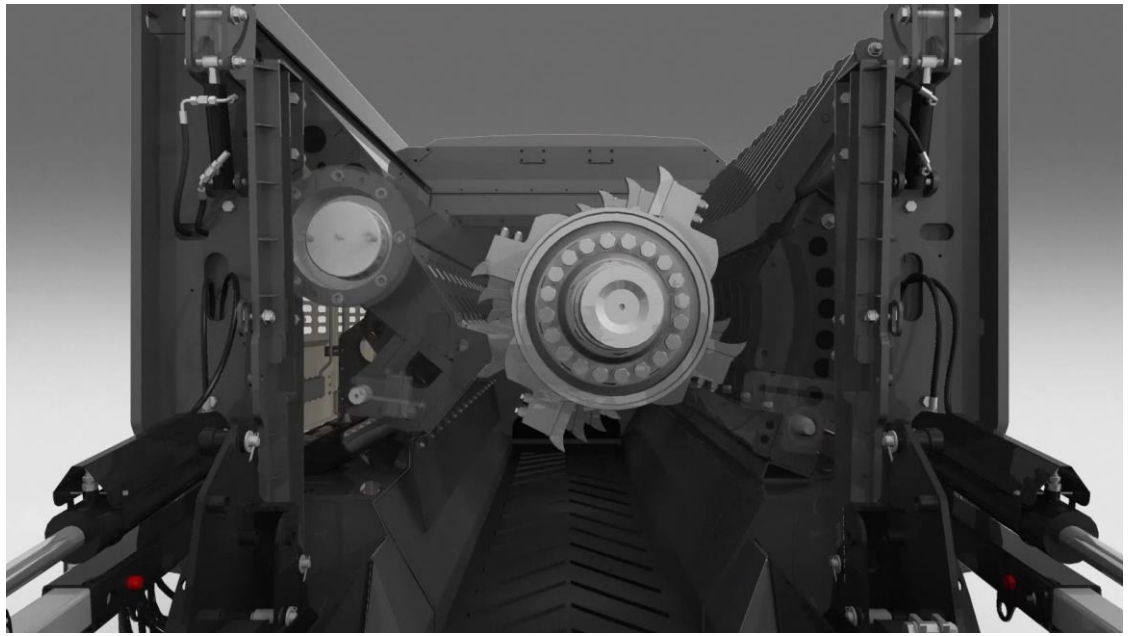

Machine Overview/ Comb

Comb Lockout Mode

- Comb locked in position.
- High pressure scenario causes shaft to reverse.
- Output material sizing is maintained.

Press Play

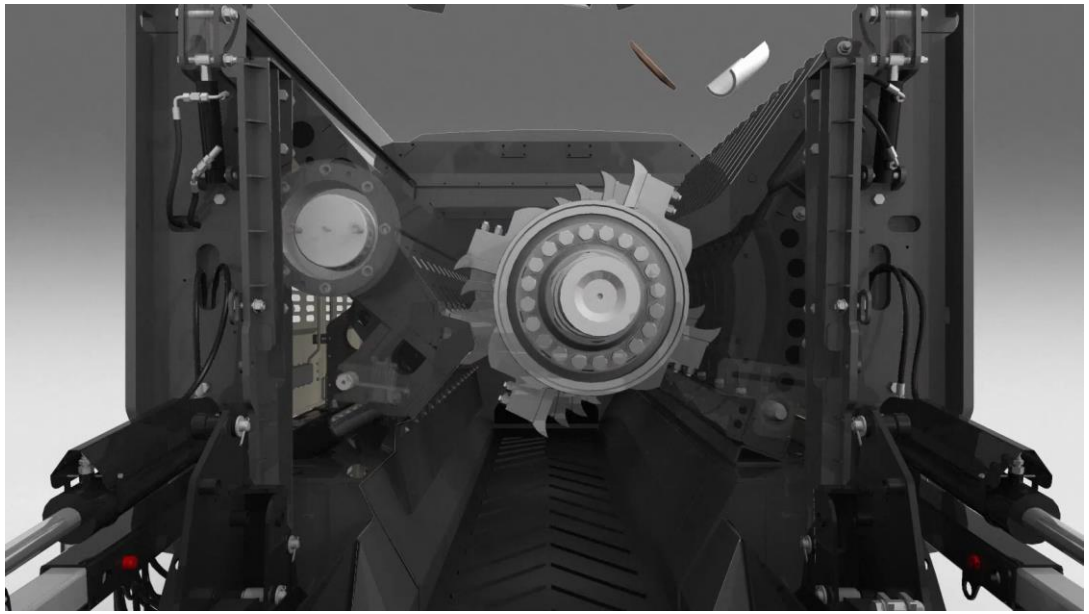

Machine Overview/ Screens

Interchangeable basket system

- Screens can be fitted to produce a more accurately sized product.
- Baskets come in a range of sizes and style, to create different product with one machine.
- This is a bolt in system and can be changed quickly making it great for swapping applications.

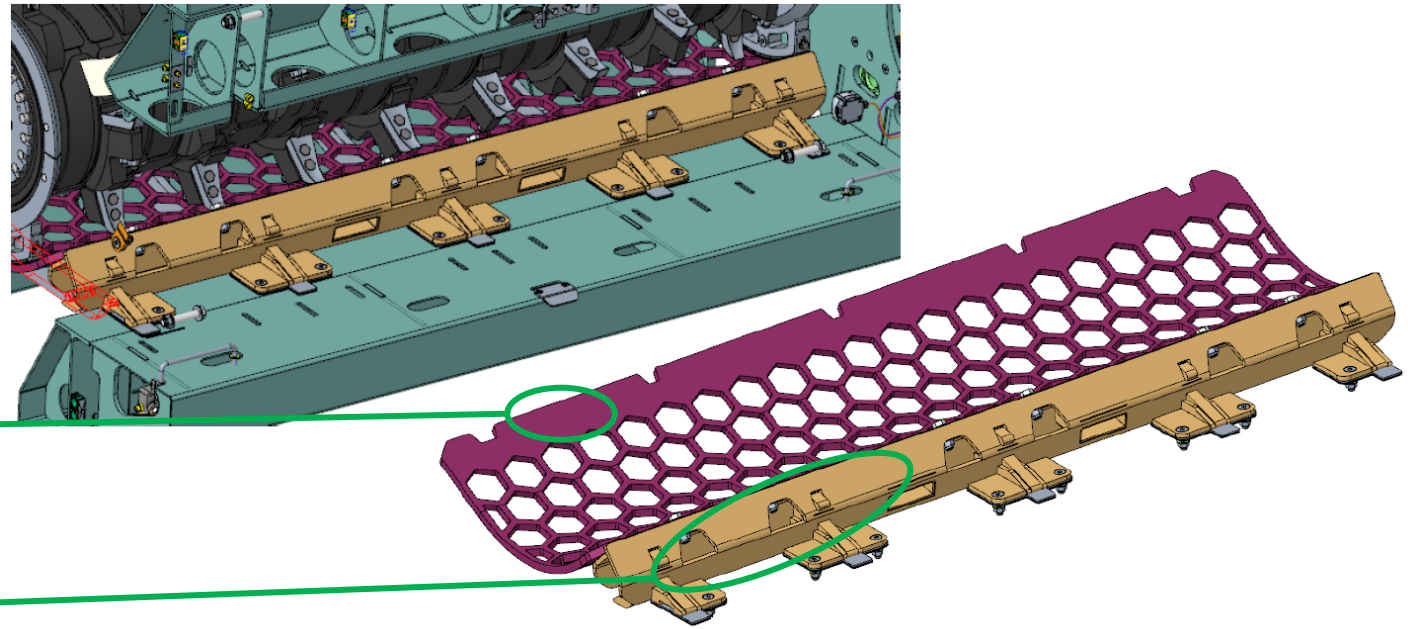

Machine Overview/ Reverse Rakers

- Reverse rakers are to help clean the single shaft shredder while reversing.
- There are two types of reverse rakers.
- Open rakes are for bulky applications.
- Closed rakes are for fine shred applications to limit unshredded material bypassing the shredding chamber when the shaft is reversing.

Open

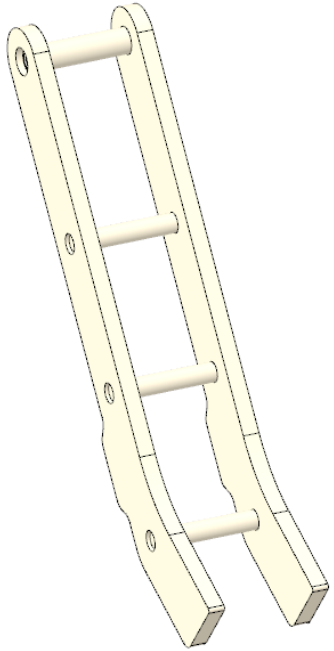

Closed

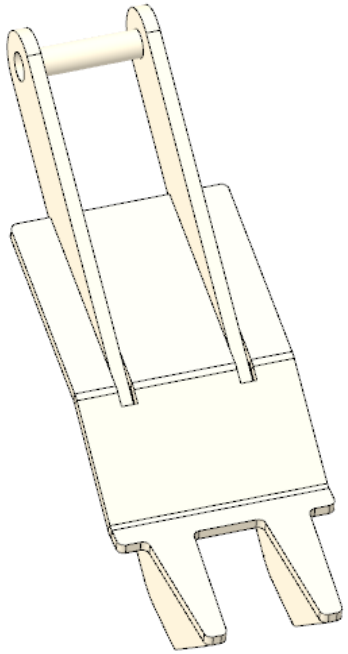

Machine Overview/ Power Unit

- 493HP Scania DC13 Engine.
- Liebherr hydrostatic pump and two-stage shredder motor drive system.
- Cleanfix variable pitch and auto reverse cooling fan.
- Unrivalled service access.
- Removable engine cradle for major service overhaul.
- Fuel tank capacity : 800 litres.

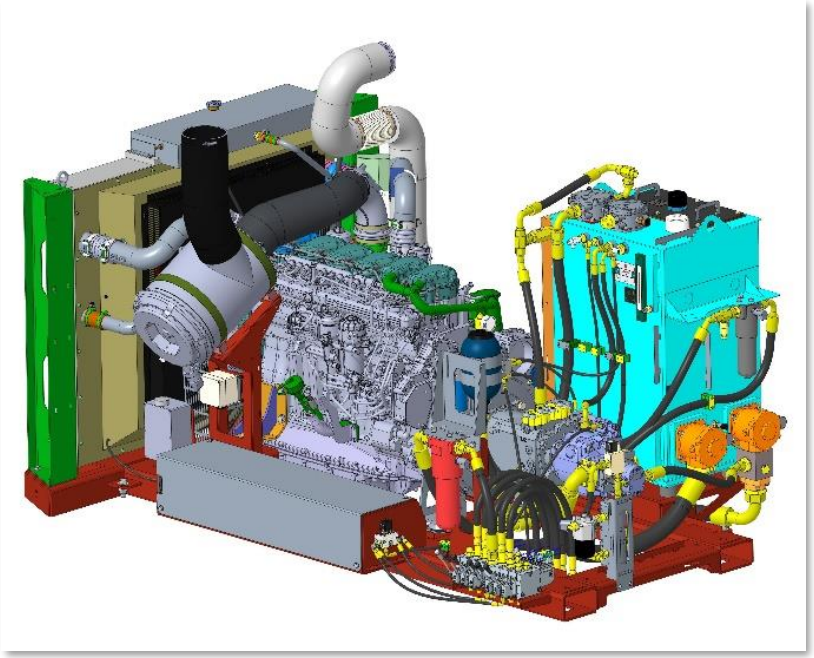



Machine Overview/ CleanFix Fan

- Intelligent CleanFix variable pitch cooling fan adjusts air flow rates to suit the cooling requirements, in turn improving engine efficiency.

- The CleanFix fan can rapidly reverse, at full engine RPM, to clean the cooling pack.
  This is an automatic function or can be activated manually when required.

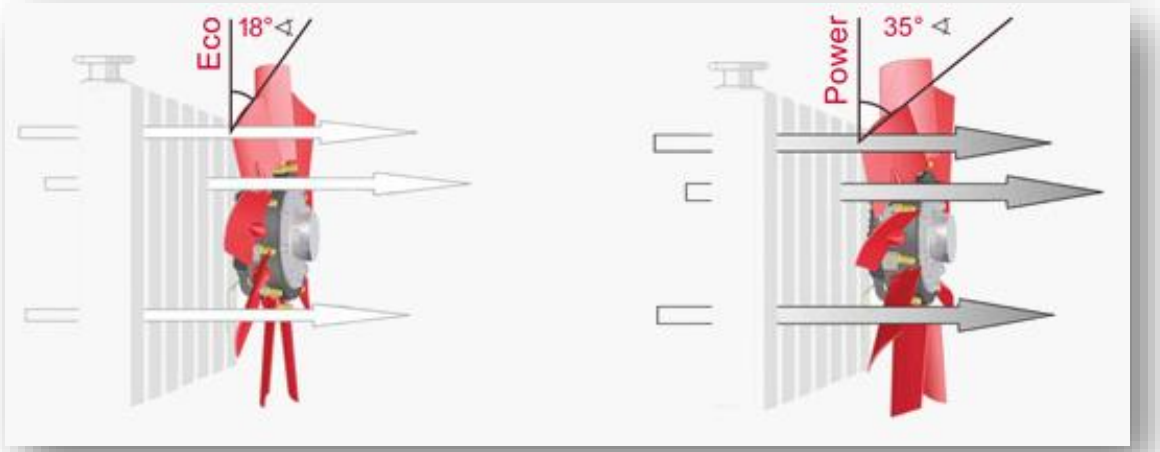

Intelligent variable pitch cooling fan

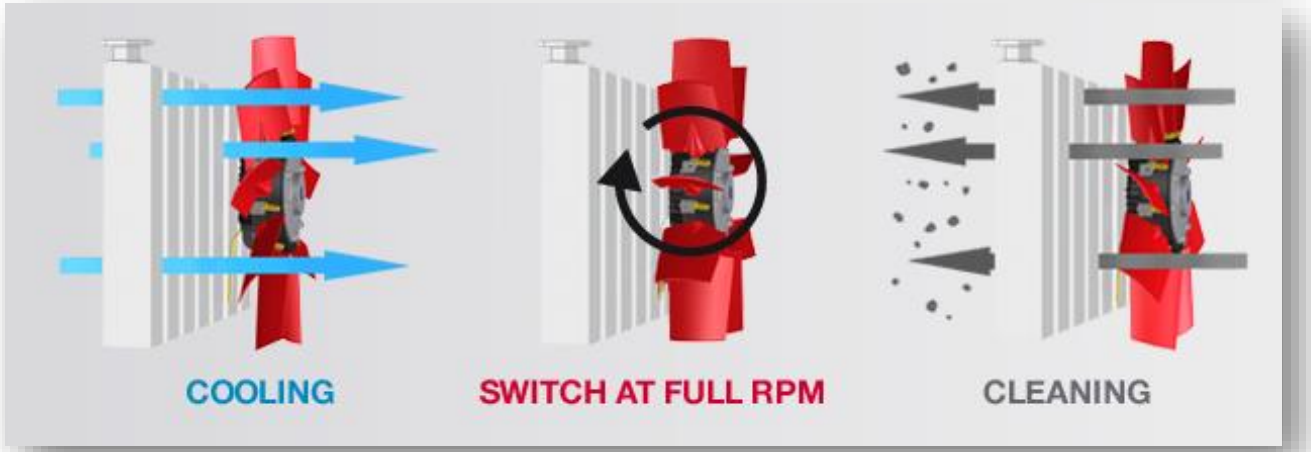

Reversing fan function

Machine Overview/ Transfer Conveyor

- Grade “X” chevron belt, highly resistant to damage
- Modular cassette – removable for maintenance
- Speed sensor to stop shredding in under-speed situation
- Width = 1000mm (3’ 3")
- Length = 4000mm (13’1”)
- Max belt speed = 130m/min (427’/min)





Machine Overview/ Product Conveyor

- Lowers to 15 degrees for ground level maintenance.
- Variable discharge height of 4.65m-1.8m (15’3” – 5’10”).
- Speed wheel sensor to stop shredding in under-speed situation.
- Width: 1200mm (3’11”).
- Length: 7000mm(22’12”).
- Max belt speed: 130m/min(427’/min).



Machine Overview/ Over Band Magnet

- The magnet is suspended over the discharge conveyor.
- Hydraulic raise/ lower.
- Can be operated via remote control.



Recovered metal from wood waste processing



Variable speed control feature comes as standard

Machine Overview/ Over Band Magnet

- Machine is fitted with strong tracks, with 2 speed tracking for greater control on all terrain.
- Heavy duty track undercarriage unit with 400mm(16”) shoes.
- Controlled via umbilical or radio remote.





Machine Overview/ HMI Screen/ Panel



- CANBUS control system with user friendly colour display offering simple operation and diagnostics.
- High quality IFM PLC, nodes and screen used.
- Full CANBUS diagnostics on screen.
- Designed so that machine can be used regardless of operator language.
- Full function Hetronic remote control providing control of both tracking and shredding.

The control panel is used to control the following functions:
○ Engine Speed
○ Product Conveyor
○ Shafts
○ Machine Diagnostics
The control panel is located on the right-hand side of the machine

Machine Overview/ HMI Screen/ Panel

Operator panel

- The shredder control is fully integrated into the machine PLC control system.
  - This enables shredder setting changes to made easily

- The control panel is located on the right-hand side of the machine.

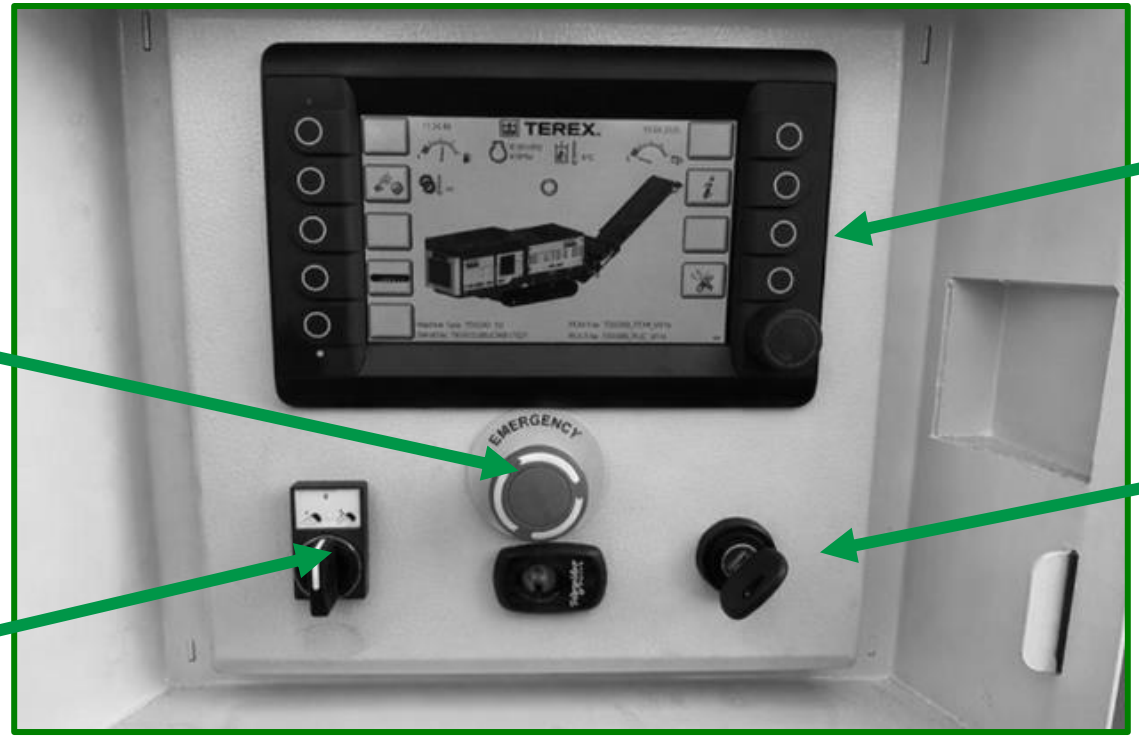

PDM

Emergency Stop Button

Ignition Key

Work lights activate/ Deactivate

Machine Overview/ Options

Engine Options
- Stage V Scania DC13 368 kW (493HP) @ 1800RPM Variable
- – EU & USA
- Tier II Scania DC13 368kW (493hp) @1800RPM Variable

Comb Options
- 17 off Comb Extensions

Reversable fan

Screens Sizes
- 100mm x 100mm Hex
- 120mm x 120mm Hex
- 145mm x 100mm
- 120mm open slot

Overband magnet
- High strength overband magnet c/w armoured belt c/w hydraulic raise/ lower
- Standard overband magnet c/w hyd raise/lower

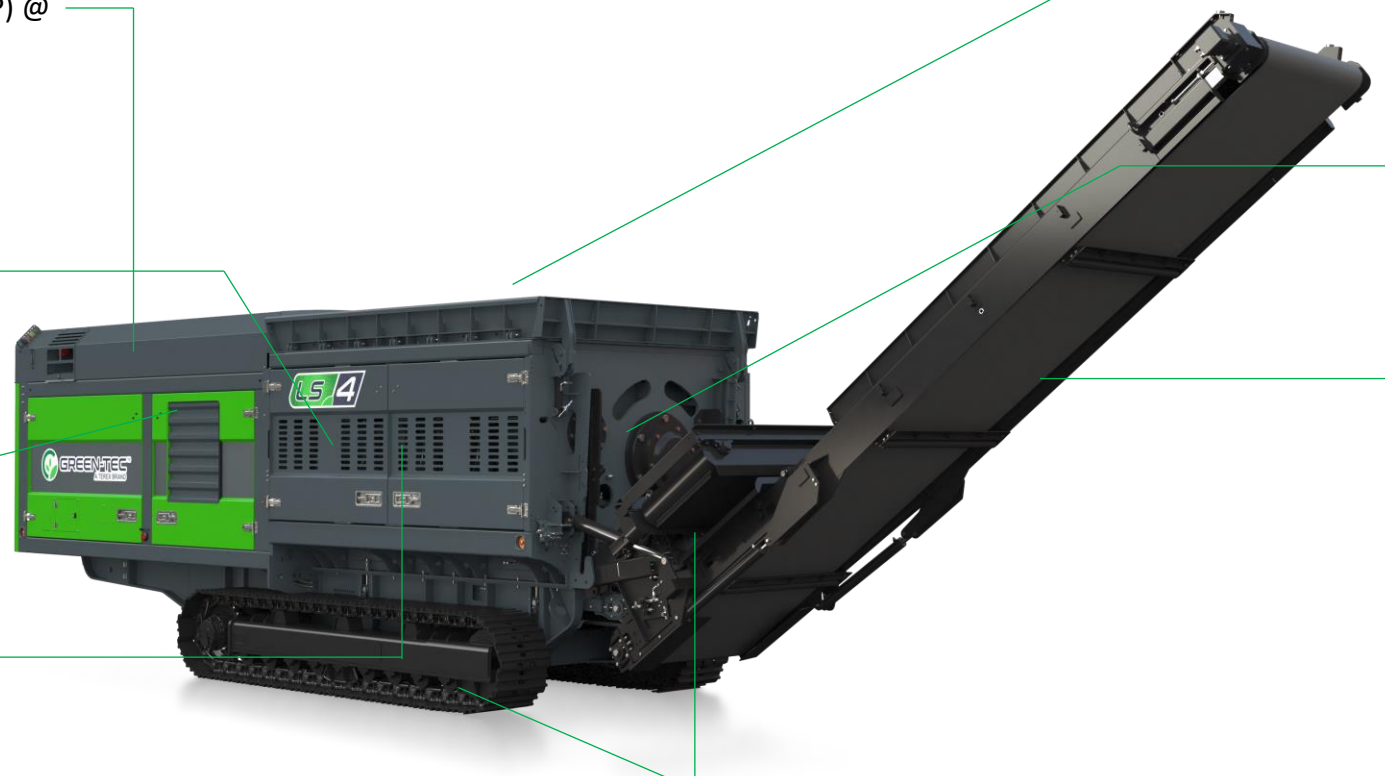

Reverse Rakers
- Closed Reverse Rakers
- Open Reverse Rakers
- Three Piece Rakers

Shaft options
- Shaft configuration - 18 off trapezium 168mm teeth
- Shaft configuration – 36 off trapezium 168mm teeth

Auto lube
- Conveyor Auto Lube System - Shredder & Conveyors

Different colour RAL

Chamber camera and monitoring camera

Hot Climate oils

Flat steel pads or rubber clip on track pads

Set Up and Operations/ Shaft Settings

- LS4 has 3 pre-set programs to choose from for quick machine set up.
- You can view and select these programs here by using the scroll button on the display screen.

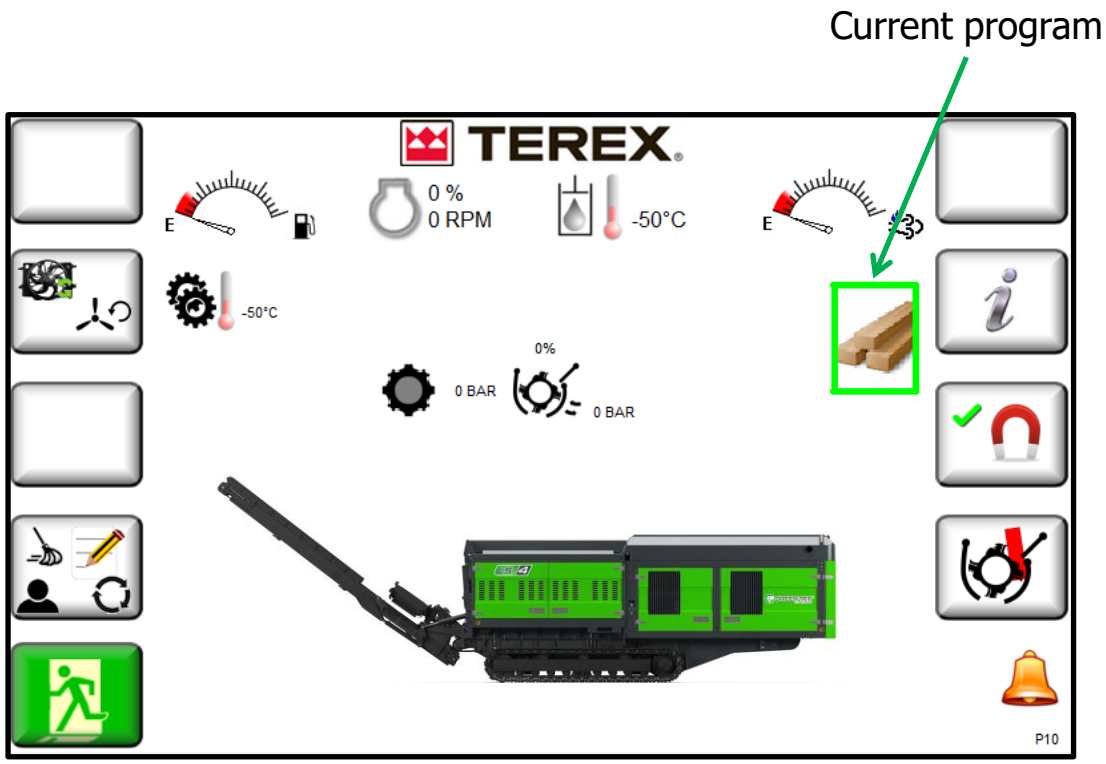



Green Waste



Wood



Black Bag Waste

Set Up and Operations/ Shaft Settings

- 3 user customisable programs allow the operator to create their own programs for any type of waste material.
- After being set these save to the machine until adjusted again

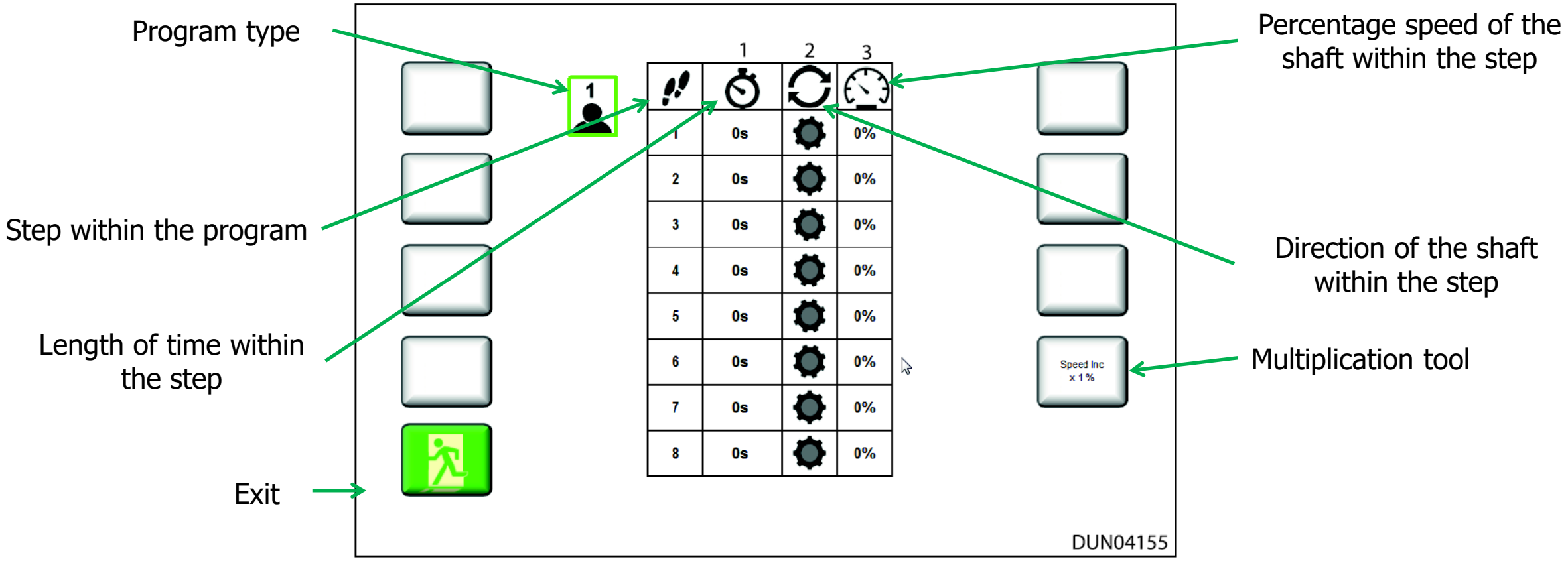

Machine Overview/ Comb

- There are two relief modes for the comb.
- These can be set here in the PDM depending on your application ensure that you select the correct relief mode.

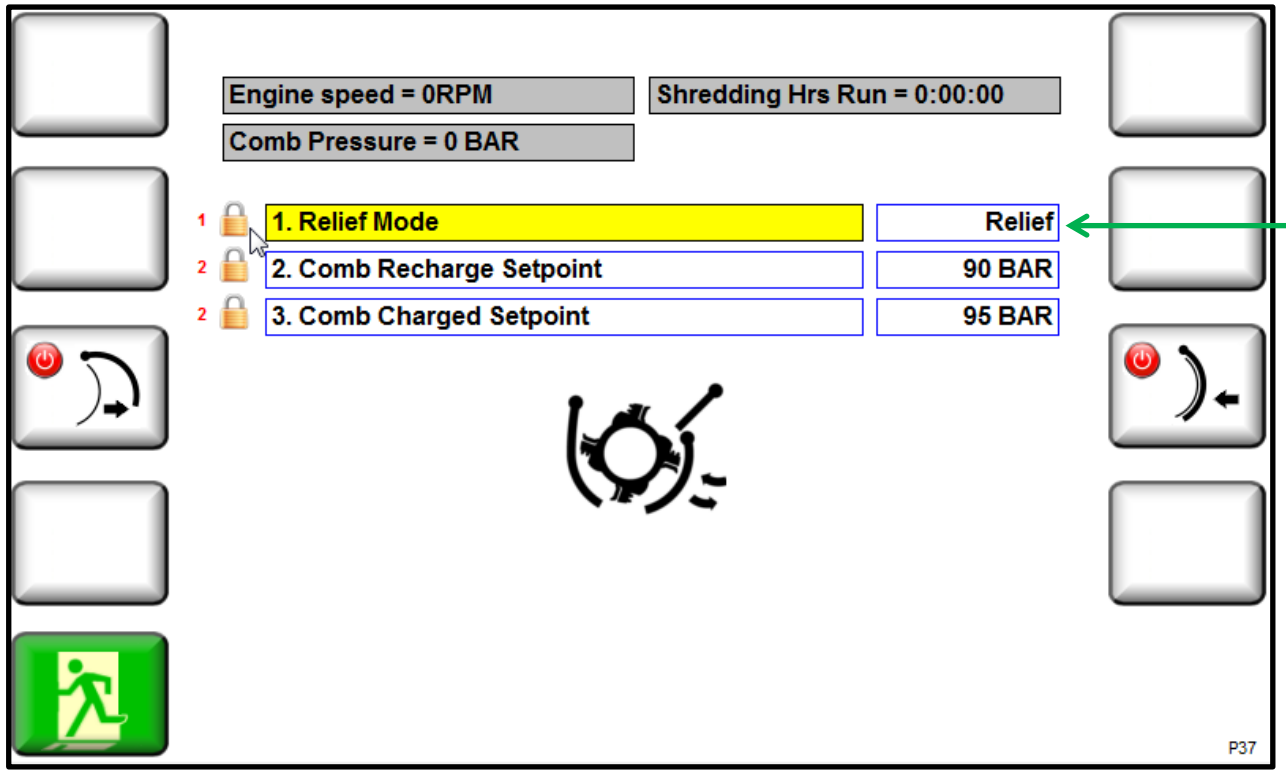

Select relief mode

Select locked mode

Set Up and Operations/ Comb Shimming

The comb can be set for different sizes of material. Using the shims provided with the machine, you can add/ remove shims to increase/ decrease the size of the end product.
You must first open the comb fully then you will be able to add/ remove shims.
It's important to remember that the minimum setting for all machines is the two shims that are not removable.

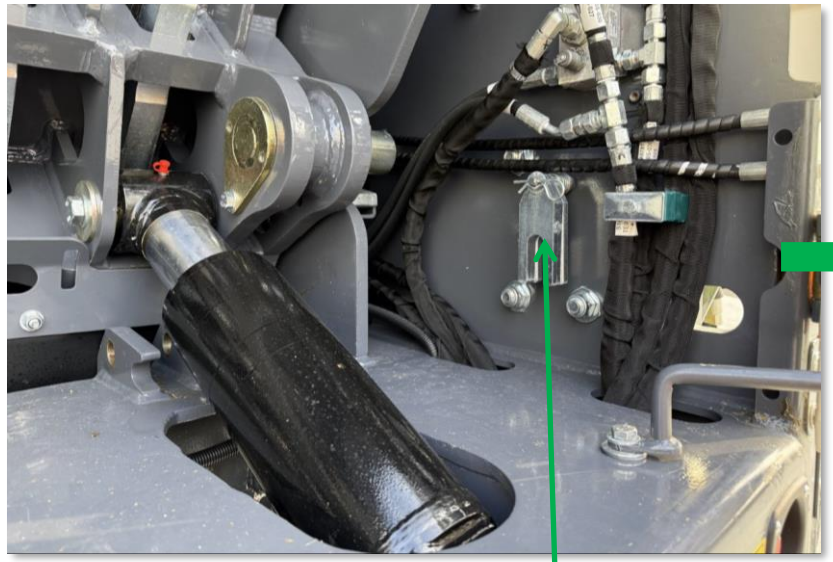

Shim storage location

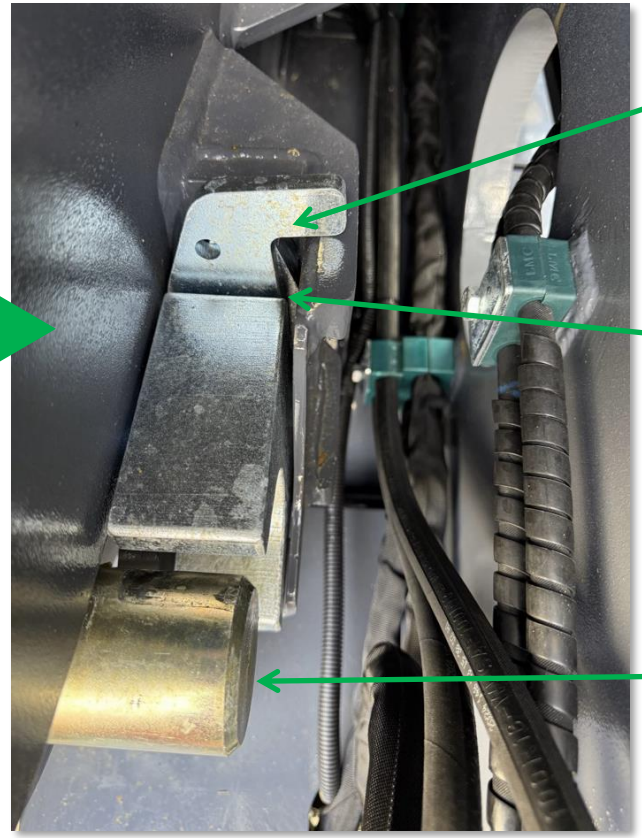

Machine currently has minimum number of shims in position

Add/ remove shims infront of the minimum shims on machine

Ensure that comb has been opened

Machine Overview/ Power Unit

- Power unit has doors on all sides, that open fully for great service access.





Maintenance/ Shaft Teeth Change

- The teeth are easily swapped by just removing the bolts that attach them to the shaft.



Maintenance/ Comb Change

- Hydraulic door can be opened for easy access.



Maintenance/ Hard Facing

- All components can be hard faced for prolonged parts life.







Maintenance/ Greasing

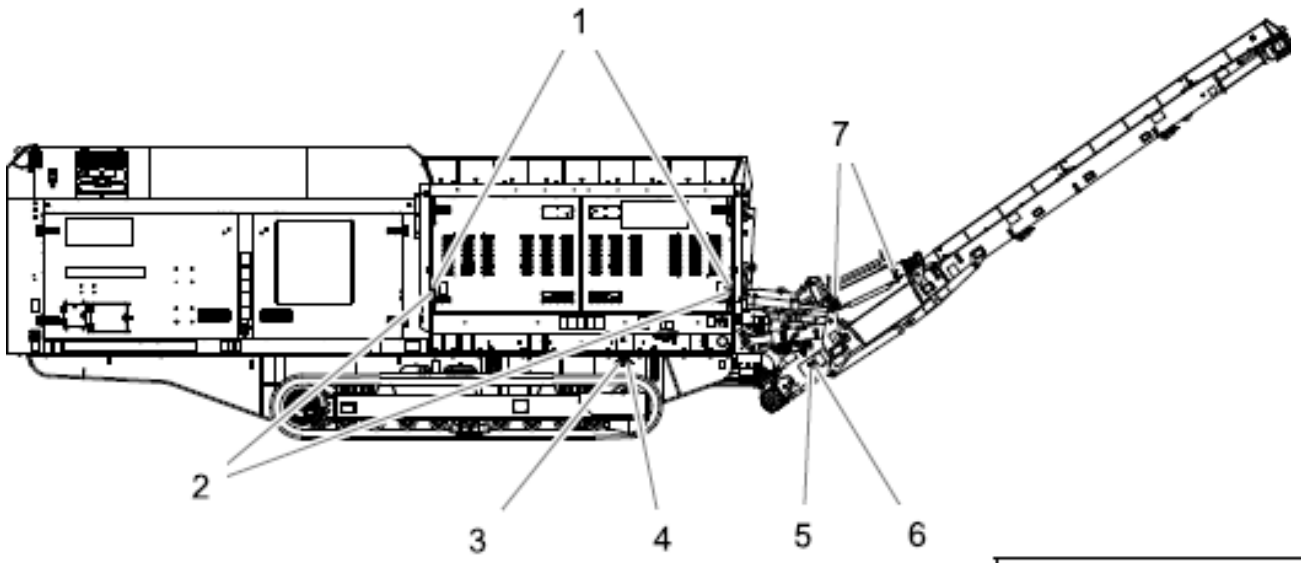

	LOCATION	QUANTITY	FREQUENCY	CAPACITY
1	SHREDDER SHAFT BEARING	2	50 Hours	15 grams
2	COMB SHAFT BEARING	2	50 Hours	4 grams
3	TRANSFER CONVEYOR HEAD DRUM	2	50 Hours	4 grams
4	TRANSFER CONVEYOR TAIL DRUM	2	50 Hours	4 grams
5	PRODUCT CONVEYOR HEAD DRUM	2	50 Hours	4 grams
6	PRODUCT CONVEYOR TAIL DRUM	2	50 Hours	4 grams
7	MAGNET BEARING	4	50 Hours	4 grams

Unique Selling Points/ Hydrostatic Drive vs Direct Drive

Hydrostatic Drive

- Ability to reverse shaft at full speed and full torque
- Greater overload protection
- Quickly and easily control and adjust shaft speed and direction
- 2 stage motor allows switch to low speed – high torque mode

Direct Drive

- No reverse – prone to wrappage
- Less protection from damage by non-shreddables
- Cannot start-up whilst under load
- Health & Safety issues – shaft turns immediately when engine is started on some models

Unique Selling Points/ Hydrostatic Drive vs Direct Drive

Hydrostatic Drive

- Terex LS4
- Komptech Terminator 5000
- Tana Shark 440DT
- Eggersman Teuton Z 55

Direct Drive

- Doppstadt DW3060
- Pronar MRW 1.300
- Neuenhauser Targo 3000

Doppstadt Inventhor

Direct drive with slow speed hydraulic reverse (4rpm max)

Competitor Comparison/ Doppstadt DW3060

Measurements
Chassis: track drive with two speeds
Total Weight: 66,139 lb

Drive
Engine Drive: diesel engine
Engine Type: MTU 6R1300
Engine Nominal Power: 320 kW (435 hp) at 2,000 rpm
Engine Fuel Tank: 2x 300 l
Transmission: Direct drive



Equipment
Standard Equipment: roller tooth 174 (6.9') C, armored comb tooth, additional hydraulic connection 20l (4.3 gal) & 70l (15,3 gal)
Additional Equipment: twin drive, hopper extensions, comb basket system, comb extension, over band magnet, magnetic pulley.

Shaft spec
Barrel Length : 3.000 mm
Barrel Diameter : 600 mm
Barrel Speed : 31 min-1
Barrel Tooth Width : 60 mm
Barrel Tooth Length : 174 mm
Barrel No. Of Teeth : 21

Competitor Comparison/ Komptech Terminator 5000

Model	3400	3400 S	5000	5000 S
Engine				
Manufacturer	Caterpillar	Caterpillar	Caterpillar	Caterpillar
Power (kW/HP)	242/330	242/330 Drum drive on both sides	328/446	328/446 Drum drive on both sides
Loading heights				
Loading heights (mm)	Hook: 2,396 | Trailer: 2,996 | Track: 2,898			
Discharge heights (mm, 10°-35°)	Hook: 1,388-3,842 | Trailer: 1,919-4,250 | Track: 1,830-4,151			
Shredding unit				
Drum rpm	max. 29	max. 29	max. 29	max. 32
Drum length (mm)	3,000	3,000	3,000	3,000
Drum diameter (mm)	1,050	1,050	1,050	1,050
Dimensions transport position/working position (Conveyor belt 35°)				
Hook – L x B x H (mm)	7,290 x 2,500 x 2,766 | 12,292 x 3,290 x 3,842			
Trailer – L x B x H (mm)	9,065 x 2,549 x 3,367 | 13,497 x 3,290 x 4,250			
Track – L x B x H (mm)	6,940 x 2,854 x 3,268 | 11,372 x 3,290 x 4,151			
Weight (dependent on equipment)				
Hook (t)	21.1	21.9	21.3	22.1
Trailer (t)	23.9	24.7	24.1	24.9
Track (t)	25.0	25.8	25.2	26.0
Throughput (dependent on material)				
Throughput (t/h)	up to 45	up to 50	up to 60	up to 80



Competitor Comparison/ Tana Shark 440DT

General informaton	220DTeco	440DT | 440DTeco	440D | 440Deco
Operating weight, kg *	29700	30200 (440DT) / 30400 (440DTeco)	27300 (440D)/ 27500 (440Deco)
Total length in transportation, mm**	10260	10260	10270
Total length in operation, mm	15750	15750	15680
Total width, mm	2550	2550	2530
Total heigth in transportation, mm	3600	3600	3950
Rotor shaft type	single shaft	single shaft	single shaft
Conveyor belt speed (max. m/s)	3	3	3
Conveyor width	1000	1000	1000
Discharge & transfer conveyor length (mm)	5480, 7050	5480, 7050	5480, 7050
Conveyor height on operation**	4290	4290	4720
Integrated scale	x	x	x
Remote control	x	x	option
Maximum velocity (models with tracks)	2,5 km/h	2,5 km/h	
Engine and power transmission			
Motor & efficiency	Cummins X15 - Fulfills Tier 4 final, EU Stage V	Cummins X15 (440DT) - Fulfills Tier 3, EU Stage IIIA Cummins X15 (440DTeco) - Fulfills Tier 4 final, EU Stage V	Cummins X15 (440D) - Fulfills Tier 3, EU Stage IIIA Cummins X15 (440Deco) - Fulfills Tier 4 final, EU Stage V
Power rating (SAE J1995) (kW)	399	399	399
Displacement (l) & number of cylinders	15 - 6	15 - 6	15 - 6
Fuel tank (litres)	720	720	755
Urea tank (eco-models only)	56	56	56
Rotor drive gears, pcs	1	2	2
Nominal rotor torque, kNm	220	440	440
Infeed hopper			
Loading height (mm)	3170	3170	3400
Volume m3	5	5	5
Shredding tools			
Rotor shredding length, mm	3000	3000	3000
Rotor speed max, rpm	28	28	28
Rotor diameter, mm	920	920	920
Rotor knives, pcs	33 / 44 (option)	33 / 44 (option)	33 / 44 (option)
Counter knives, pcs	23	23	23
Rotor knife type	Bolt-on, reversible knife	Bolt-on, reversible knife	Bolt-on, reversible knife
Rotor knife size, mm	115x70	115x70	115x70
Examples of optional equipment:			
Overband magnet	x	x	x
Conveyor side covers	x	x	x
Rotor screen sizes (mm)	50, 76, 90, 100, 109, 120, 140, 167, 220, 275, special tyre shredding screen	50, 76, 90, 100, 109, 120, 140, 167, 220, 275, special tyre shredding screen	50, 76, 90, 100, 109, 120, 140, 167, 220, 275, special tyre shredding screen

Technical specification D120111/ 24.10.2023

Weights and measurements are given within normal tolerances limits. The manufacturer reserves the right for any changes.

* Operating weight includes the basic machine (fuel tank full)
** When at 30° nominal working angle

*** Underband, overband or both conveyors sold as an option for the 440E model
**** 50Hz / 400 V ***** 60 Hz / 480 V UL



Competitor Comparison/ Eggersman Teuton Z 55

Tracks (Z 60)

(diesel-hydraulic)

Power:

- 447 kW (600 HP)

Throughput:

- Up to 120 t/h

Weight:

- 34,000 kg



Competitor Comparison/ Doppstadt Inventhor

INVENTHOR 6.2	3-AXLE TRAILER	SEMI-TRAILER		TRACK-LAYING CHASSIS	
Chassis	Central axle trailer chassis for 80 km/h, as per StVZO (Road Traffic Licensing Regulations), with ABS brake system	Semi-trailer chassis for 80 km/h, as per StVZO (Road Traffic Licensing Regulations), with ABS brake system		Track-laying chassis for self-propelled drive, two travel speeds	
Overall weight	25,000 kg (depending on equipment configuration)	27,000 kg (depending on equipment configuration)		27,000 kg (depending on equipment configuration)	
WORKING POSITION					
Length 1 / 2	12.947 mm / 14.766 mm	11.516 mm / 13.314 mm		11.516 mm / 13.335 mm	
Width	2.540 mm	2.540 mm		2.500 mm	
Height	3.650 mm	3.650 mm		3.967 mm	
TRANSPORT DIMENSIONS					
Length	9.068 mm	7.636 mm		7.636 mm	
Width	2.540 mm	2.540 mm		2.500 mm	
Height	3.650 mm	3.650 mm		3.378 mm	
DRIVE					
Engine type	Diesel hydraulic	Diesel hydraulic	Electro-hydraulic	Diesel hydraulic	Electro-hydraulic
Tank capacity	425 L	425 L		425 L	
INVENTHOR 6.2					
Nominal output	260 kW (354 HP) at 1700 rpm	260 kW (354 HP) at 1700 rpm		260 kW (354 HP) at 1700 rpm	
Emission standard	Stage V	Stage V		Stage V	
Cubic capacity	7.700 cm³	7.700 cm³		7.700 cm³	
Make	MTU 6R1000 Daimler OM 936*	MTU 6R1000 Daimler OM 936*		MTU 6R1000 Daimler OM 936*	
INVENTHOR 6.2 PLUS					
Nominal output	310 kW (421 HP) at 1800 rpm	310 kW (421 HP) at 1800 rpm	315 kW (428 HP) at 1.800 rpm	310 kW (421 HP) at 1800 rpm	315 kW (428 HP) at 1.800 rpm
Emission standard / Energy-efficiency class	Stage V or EUROMOT IIIA	Stage V or EUROMOT IIIA	IE3	Stage V or EUROMOT IIIA	IE3
Cubic capacity / Operating mode	9.300 cm³	9.300 cm³	Frequency converter	9.300 cm³	Frequency converter
Make	CAT C9.3B	CAT C9.3B		CAT C9.3B	
LOADING					
Loading height with hopper extension	3.650 mm	3.650 mm		3.378 mm	
Loading height without hopper extension	3.194 mm	3.194 mm		2.922 mm	
Loading width	3.374 mm	3.374 mm		3.374 mm	
SHAFT					
Drum length	2.200 mm	2.200 mm		2.200 mm	
Diameter	600/800 mm	600/800 mm		600/800 mm	
Speed	~2 to 30 rpm	~2 to 30 rpm		~2 to 30 rpm	
CONVEYOR BELT					
Width lower belt	800 mm	800 mm		800 mm	
Length lower belt	2.900 mm	2.900 mm		2.900 mm	
Conveying speed lower conveyor	1,3 to 2,9 m/s	1,3 to 2,9 m/s		1,3 to 2,9 m/s	
Width rear belt	1,000 mm	1,000 mm		1,000 mm	
Length rear belt 1 / 2	4.900 mm / 7.000 mm	4.900 mm / 7.000 mm		4.900 mm / 7.000 mm	
Conveying speed rear belt	1,25 to 3,0 m/s	1,25 to 3,0 m/s		1,25 to 3,0 m/s	
Discharge height rear belt 1 / 2	3.159 mm / 4.209 mm	3.159 mm / 4.209 mm		2.887 mm / 3.937 mm	
OTHER					
Optional equipment	*Limiter" oversize return, shredder packages of size M, L, hydraulic drive, rear belt length 7 m, overbelt magnet, auxiliary hopper attachment panels, hopper wedge, misting system, winter package, LED light package	*Limiter" oversize return, shredder packages of size M, L, hydraulic drive, rear belt length 7 m, overbelt magnet, auxiliary hopper attachment panels, hopper wedge, misting system, winter package, LED light package		*Limiter" oversize return, shredder packages of size M, L, rear belt length 7 m, overbelt magnet, auxiliary hopper attachment panels, hopper wedge, misting system, winter package, LED light package	



Competitor Comparison/ Pronar MRW 1.300

MOBILE SLOW-SPEED SHREDDER	MRW 1.300
Dimensions (length/width/height) [mm]	10140/2540/3675
Weight [kg]	~27000*
Number of shafts	1
Shafts length [mm]	3000
Loading height [mm]	2870
Working chamber dimensions (length/width) [mm]	3650/2200
Hopper capacity [m3]	~6,4
Engine	Volvo Penta 12.8l, 405 kW, Stage V/Tier 4 Final

* Weight depends on the specification of the individual piece and may be higher



Competitor Comparison/ Neuenhauser Targo 3000

- Direct Drive machine.



Applications/ Versatile Shredding

The LS4 is engineered to tackle a wide range of applications providing high output and low operational costs.

The machine can be employed in multiple applications such as:

- C&D
- Asphalt
- General skip and household waste
- Green waste
- Waste wood
- Bulky waste
- Rigid plastics
- Car tyres



Applications/ Versatile Shredding


Wood Waste


< 250mm

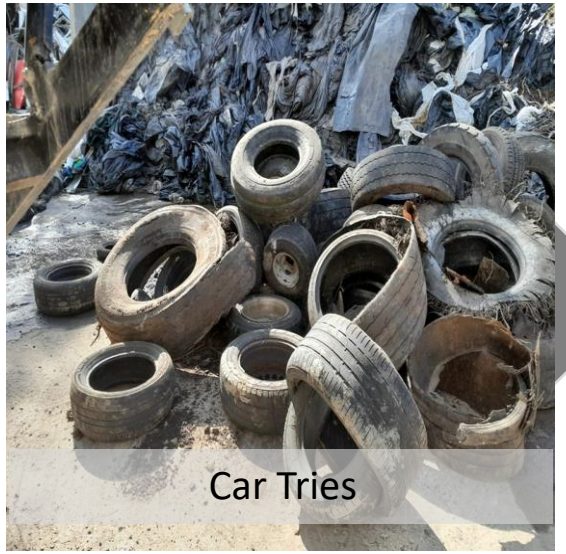
Car Tries


< 200mm


Green Waste


Green Waste


C&D Waste


< 100mm